BLINDS/SHADES

From Design to Installation, Your Vision Without Compromise.™

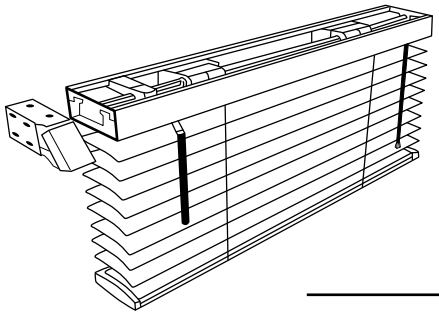

FAUX WOOD BLINDS

The micro blind provides an intelligent alternative to standard mini blinds. It features 1/2" wide slats instead of the customary 1" mini blind slat. The micro blind is an ideal choice for smaller window openings.

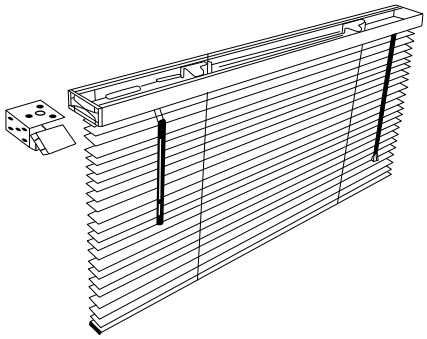

MICRO/MINI BLINDS

The 1" slat has long remained the industry standard in mini blinds. The appeal is a result of its form and function combining long lasting dependability with a large choice of commercial options. Most mini blinds can be purchased in widths of up to 12'.

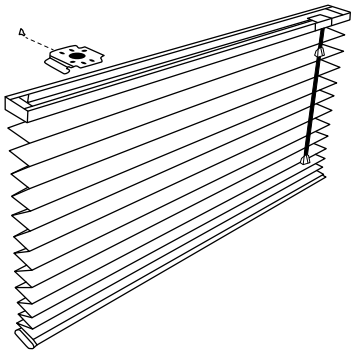

PLEATED SHADES

Ideally suited for health care installations, pleated shades provide a soft fabric look to window openings. A wide selection of fabrics provide a variety of looks from sheer to privacy. Most styles are available metallized or fire resistant. Pleated shades are an economical choice with dependable quality.

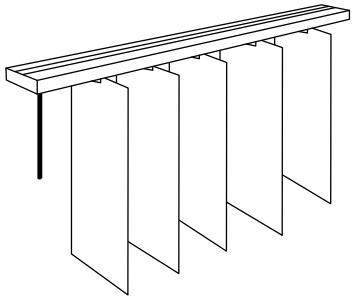

VERTICAL BLINDS

Vertical blinds are custom made in a wide variety of sizes, shapes, and colors. PVC, metal, or fabrics can be used for louvers in this versatile window treatment. Louvers can be rotated to any desired angle, or can be traversed open and closed, allowing the desired light penetration. Most companies offer a limited lifetime warranty on their headrails.

DI can provide measurement and installation support on all of these products if needed. There is an additional fee for these services.

DECORATOR INDUSTRIES

1400 E. Ash Street, PO Box 432, Abbotsford, WI 54405 • **www.decoratorindustries.com**